NuTiny-SDK-Mini51 User Manual

For NuMicro™ Mini51 Series

The information described in this document is the exclusive intellectual property of Nuvoton Technology Corporation and shall not be reproduced without permission from Nuvoton.

Nuvoton is providing this document only for reference purposes of NuMicro™ microcontroller based system design. Nuvoton assumes no responsibility for errors or omissions.

All data and specifications are subject to change without notice.

For additional information or questions, please contact: Nuvoton Technology Corporation.

1 Overview 3

2 NuTiny-SDK-Mini51 introduction 3

2.1 NuTiny-SDK-Mini51 Jumper Description 4
2.2 Pin Assignment for Extended Connector 5
2.3 NuTiny-SDK-Mini51 PCB Placement 5

3 How to start NuTiny-SDK-Mini51 on the Keil uVision® IDE 6

3.1 Keil uVision® IDE Software Download & Install 6
3.2 Nuvoton Nu-Link Driver Download & Install 6
3.3 Hardware Setup 6
3.4 Smpl_NuTiny-EVB_MINI51 Example Program 7

4 How to start NuTiny-SDK-Mini51 on the IAR Embedded Workbench 8

4.1 IAR Embedded Workbench Software Download & Install 8
4.2 Nuvoton Nu-Link Driver Download & Install 8
4.3 Hardware Setup 8
4.4 Smpl_NuTiny-EVB_MINI51 Example Program 9

5 NuTiny-EVB-Mini51 Schematic 10

6 To Download NuMicro™ Family Releated Files From Nuvoton Company 11

6.1 To Download NuMicro™ Nu-Link Driver for Keil RVMDK 11
6.2 To Download NuMicro™ Nu-Link Driver for IAR EWARM 12
6.3 To Download NuMicro™ Mini51 Series BSP Software Library 13

7 Revision History 14

1 Overview

NuTiny-SDK-Mini51 is the specific development tool for NuMicro™ Mini51 series. Users can use NuTiny-SDK-Mini51 to develop and verify the application program easily.
NuTiny-SDK-Mini51 includes 2 portions. One is NuTiny-EVB-Mini51 and the other is Nu-Link-Me. NuTiny-EVB-Mini51 is evaluation board and Nu-Link-Me is its Debug Adaptor. Thus, users do not need additional ICE equipment.

2 NuTiny-SDK-Mini51 introduction

NuTiny-SDK-Mini51 can support NuMicro™ Mini51 series. Figure 2-1 is NuTiny-SDK-Mini51 for Mini51 series and the left portion is called NuTiny-EVB-Mini51 and the right portion is Debug Adaptor called Nu-Link-Me.
NuTiny-EVB-Mini51 is similar to other development board. Users can use it to develop and verify applications to emulate the real behavior. In fact, the real chip MINI54LAN is mounted on the board. The on board chip covers Mini51 series features. The NuTiny-EVB-Mini51 can be a real system controller to design user target system.
Nu-Link-Me is a Debug Adaptor. **The Nu-Link-Me Debug Adaptor connects your PC's USB port to your target system (via Serial Wired Debug Port) and allows you to program and debug embedded programs on the target hardware.** To use Nu-Link-Me Debug adaptor with Keil or IAR Please refer to "Nuvoton NuMicro™ IAR ICE driver user manual " or Nuvoton NuMicro™ Keil ICE driver user manual" in detail.

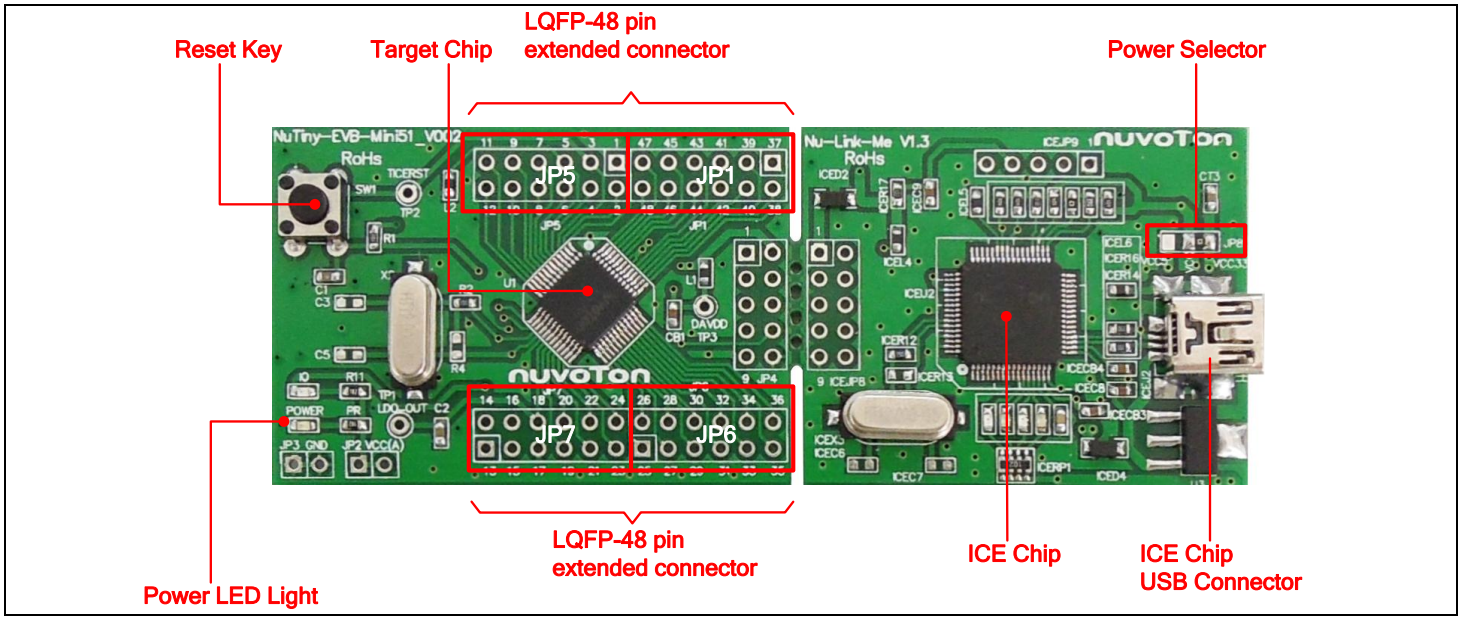

Figure 2-1 NuTiny-SDK-Mini51 (Green Color PCB Board)

2.1 NuTiny-SDK-Mini51 Jumper Description

2.1.1 Power Setting

- ICEJ2: USB port in Nu-Link-Me
- JP8: Select 5V or 3V for system power in Nu-Link-Me
- JP2 VCC(A): VCC Voltage connecter in NuTiny-EVB-Mini51

POWER model	ICEJ2 USB port	JP8	JP2 VCC(A)	MCU Voltage
Model 1	**Connect to PC**	**Select VCC3(default)**	**DC 3V output**	**DC 3V**
Model 2	**X**	**X**	**DC 2.8-5.5V input**	**Voltage by JP2 VCC(A) input**

X: Not use.

2.1.2 Debug Connector

- JP4: Target ICE Connector in NuTiny-EVB-Mini51
- ICEJP8: Nuvoton ICE Connector in Nu-Link-Me

2.1.3 USB Connecter

- J2: mini USB Connecter in Nu-Link-Me

2.1.4 Extended Connecter

- JP5, JP6, JP7 and JP1: Show all of chip pins in NuTiny-EVB-Mini51

2.1.5 Reset Button

- SW1: Reset button in NuTiny-EVB-Mini51

2.1.6 Power Connecter

- JP2 VCC(A): VCC connecter in NuTiny-EVB-Mini51
- JP3 GND: GND connecter in NuTiny-EVB-Mini51

2.2 Pin Assignment for Extended Connector

NuTiny-EVB-Mini51 provides MINI54LAN on board and the extended connector for LQFP-48 pin. Table 2-1 is the pin assignment for MINI54LAN.

Pin No	Pin Name	Pin No	Pin Name
01	NC	25	P2.5, PWM3
02	P1.5, AIN5, CPP0	26	P2.6, PWM4, CPO1
03	/RESET	27	NC
04	P3.0, AIN6, CPN1	28	NC
05	AVSS	29	P4.6, ICE_CLK
06	P5.4	30	P4.7, ICE_DAT
07	P3.1, AIN7, CPP1	31	NC
08	P3.2, INT0, STADC, T0EX	32	P0.7, SPICLK
09	P3.4, T0, SDA	33	P0.6, MISO
10	P3.5, T1, SCL	34	P0.5, MOSI
11	NC	35	P0,4, SPISS, PWM5
12	NC	36	NC
13	NC	37	P0.1, RTSn, RX, SPISS
14	P3.6, CKO, T1EX, CPO0	38	P0.0, CTSn, TX
15	P5.1, XTAL2	39	NC
16	P5.0, XTAL1	40	NC
17	VSS	41	P5.3, AIN0
18	LDO_CAP	42	VDD
19	P5.5	43	AVDD
20	P5.2, INT1	44	P1.0, AIN1
21	NC	45	P1.2, AIN2, RX
22	P2.2, PWM0	46	P1.3, AIN3, TX
23	P2.3, PWM1	47	P1.4, AIN4, CPN0
24	P2.4, PWM2	48	NC

Table 2-1 pin assignment for MINI54LAN

2.3 NuTiny-SDK-Mini51 PCB Placement

Users can refer Figure 2-2 for the NuTiny-SDK-Mini51 PCB placement.

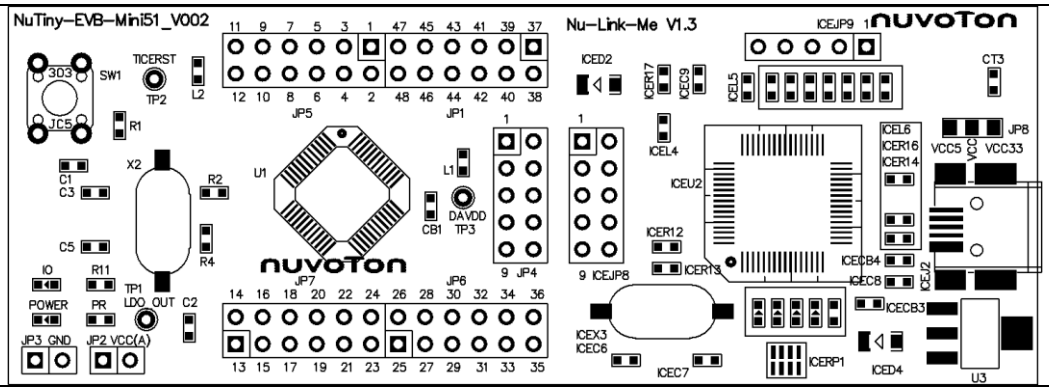

Figure 2-2 NuTiny-SDK-Mini51 PCB Placement

3 How to start NuTiny-SDK-Mini51 on the Keil uVision® IDE

3.1 Keil uVision® IDE Software Download & Install

Please connect to Keil company website (http://www.keil.com) to download the Keil uVision® IDE and install the RVMDK.

3.2 Nuvoton Nu-Link Driver Download & Install

Please connect to Nuvoton company NuMicro™ website (http://www.nuvoton.com/NuMicro) to download "NuMicro™ Nu-Link Driver for Keil RVMDK" file. Please refer the Chapter 6.1 for the detail download flow. When the download had finished, please unzip the file and execute the "Nu-Link_Keil_Driver.exe" to install the driver.

3.3 Hardware Setup

The hardware setup is shown as Figure 3-1

Figure 3-1 NuTiny-SDK-Mini51 Hardware Setup

3.4 Smpl_NuTiny-EVB_MINI51 Example Program

This example demonstrates the ease of downloading and debugging an application on a NuTiny-SDK-Mini51 board. The example can be found on the Figure 3-2 list directory.

Directory	C:\Nuvoton\BSP Library\Mini51SeriesBSP\NuvotonPlatform_Keil\Sample\NuTiny \Smpl_NuTiny-EVB_MINI51
Project File	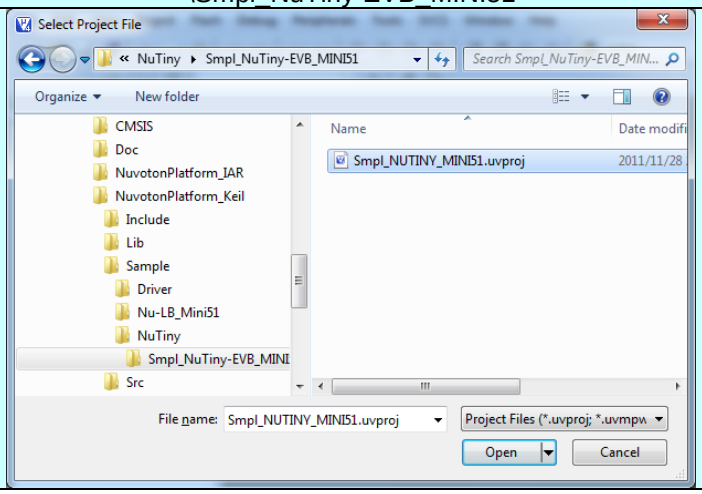

Figure 3-2 Smpl_NuTiny-EVB_MINI51 Example Directory

To use this example:

- **Start uVision**
- Open the Smpl_NUTINY_MINI51.uvproj project file

  Project-Open
- Compile and link the Smpl_NUTINY_MINI51 application

  Project - Build
- Program the application into on-chip Flash ROM

  Flash – Download

The LED will toggle on the NuTiny-EVB-Mini51 board.

Start debug mode

Using the debugger commands, you may:

- Single step through code
- Run the application\
- Review variables in the watch window
- Reset the device to re-run the application

4 How to start NuTiny-SDK-Mini51 on the IAR Embedded Workbench

4.1 IAR Embedded Workbench Software Download & Install

Please connect to IAR company website (http://www.iar.com) to download the IAR Embedded Workbench and install the EWARM.

4.2 Nuvoton Nu-Link Driver Download & Install

Please connect to Nuvoton company NuMicro™ website (http://ww.nuvoton.com/NuMicro) to download "NuMicro™ Nu-Link Driver for IAR EWARM" file. Please refer the 6.2 for the detail download flow. When the download had finished, please unzip the file and execute the "Nu-Link_IAR_Driver.exe" to install the driver.

4.3 Hardware Setup

The hardware setup is shown as Figure 3-1

Figure 4-1 NuTiny-SDK-Mini51 Hardware Setup

4.4 Smpl_NuTiny-EVB_MINI51 Example Program

This example demonstrates the ease of downloading and debugging an application on a NuTiny-SDK-Mini51 board. The example can be found on the Figure 4-2 list directory. (Samples code can be download from Nuvoton website)

Directory	C:\Nuvoton\BSP Library\Mini51SeriesBSP\NuvotonPlatform_IAR\Sample \NuTiny\Smpl_NuTiny-EVB_MINI51
Project File	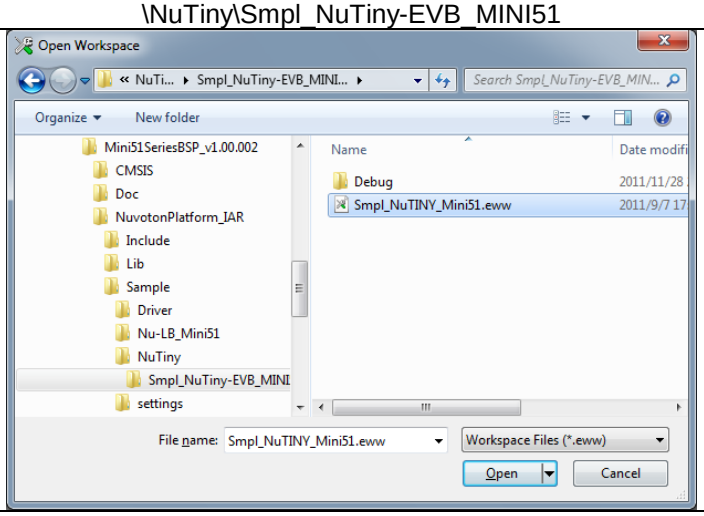

Figure 4-2 Smpl_NuTiny-EVB_MINI51 Example Directory

To use this example:

- Start IAR Embeded Workbench
- Open the Smpl_NuTINY_Mini51.eww workspace file
  File-Open-Workspace
- Compile and link the Smpl_NuTINY_Mini51 application

  Project - Make
- Program the application into on-chip Flash ROM

  Project – Download and Debug

The I/O will toggle on the NuTiny-EVB-Mini51 board.

5 NuTiny-EVB-Mini51 Schematic

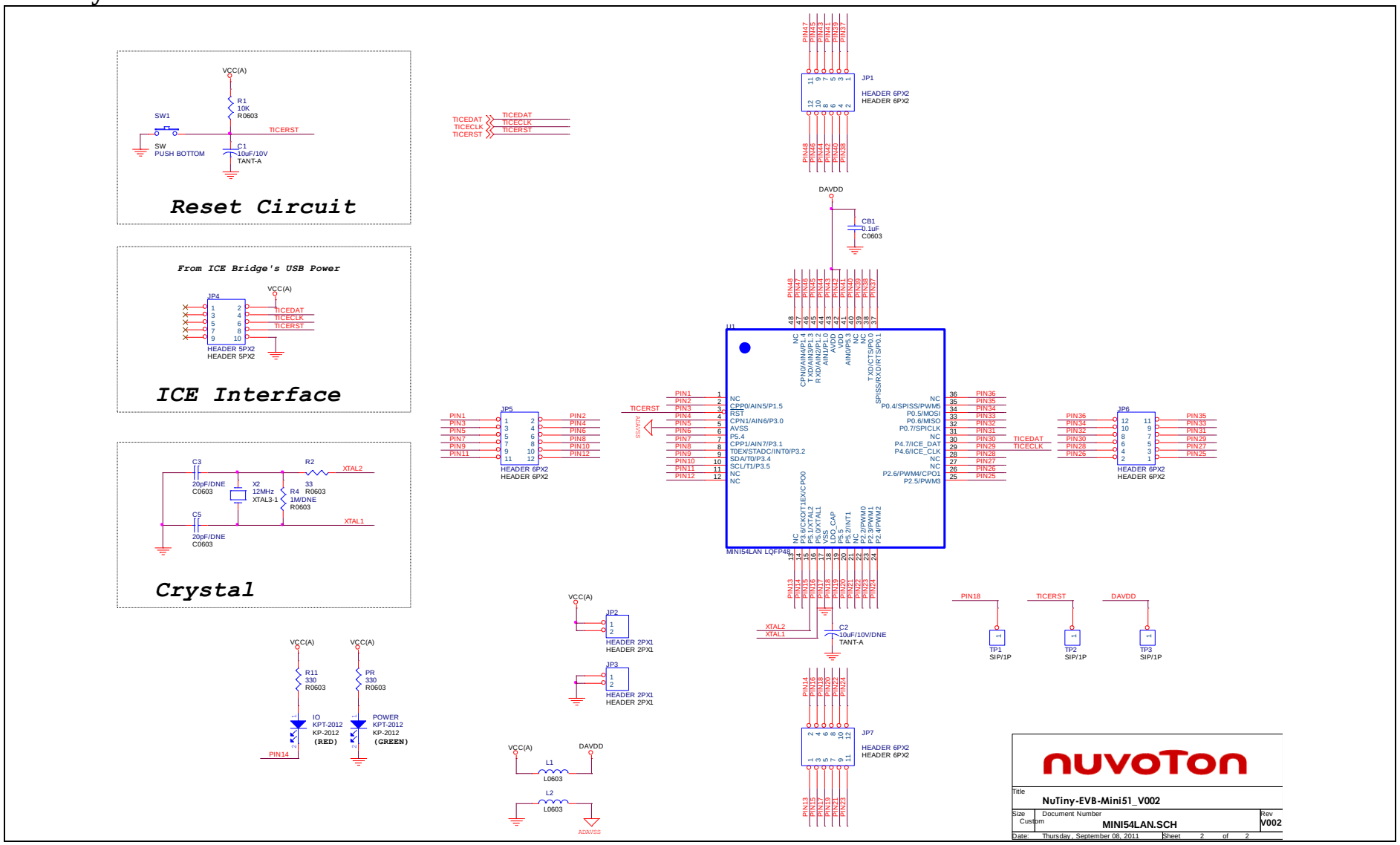

6 To Download NuMicro™ Family Releated Files From Nuvoton Company

6.1 To Download NuMicro™ Nu-Link Driver for Keil RVMDK

Step1	To connect to the Nuvoton NuMicro™ Website: **http://www.nuvoton.com/NuMicro**
Step2	
Step 3	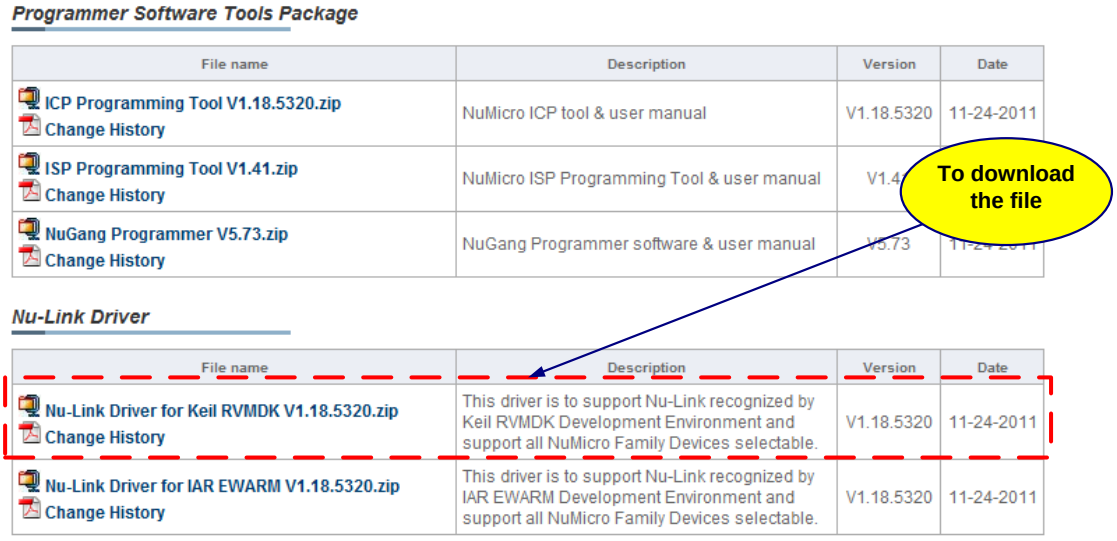 *Programmer Software Tools Package* File name / Description / Version / Date ICP Programming Tool V1.18.5320.zip / Change History — NuMicro ICP tool & user manual — V1.18.5320 — 11-24-2011 ISP Programming Tool V1.41.zip / Change History — NuMicro ISP Programming Tool & user manual — V1.4 NuGang Programmer V5.73.zip / Change History — NuGang Programmer software & user manual — V5.73 *Nu-Link Driver* File name / Description / Version / Date Nu-Link Driver for Keil RVMDK V1.18.5320.zip / Change History — This driver is to support Nu-Link recognized by Keil RVMDK Development Environment and support all NuMicro Family Devices selectable. — V1.18.5320 — 11-24-2011 Nu-Link Driver for IAR EWARM V1.18.5320.zip / Change History — This driver is to support Nu-Link recognized by IAR EWARM Development Environment and support all NuMicro Family Devices selectable. — V1.18.5320 — 11-24-2011
Step 4	To download the **NuMicro™ Nu-Link Driver for Keil RVMDK**

6.2 To Download NuMicro™ Nu-Link Driver for IAR EWARM

Step1	To connect to the Nuvoton NuMicro™ Website: **http://www.nuvoton.com/NuMicro**
Step2	
Step 3	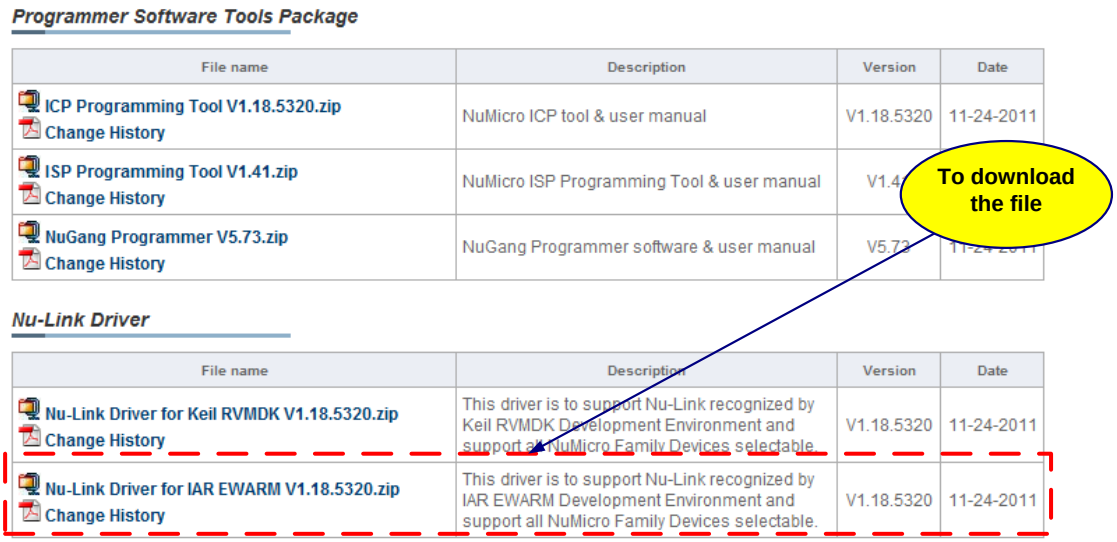
Step 4	To download the **NuMicro™ Nu-Link Driver for IAR EWARM**

6.3 To Download NuMicro™ Mini51 Series BSP Software Library

Step1	To connect to the Nuvoton NuMicro™ Website: **http://www.nuvoton.com/NuMicro**
Step2	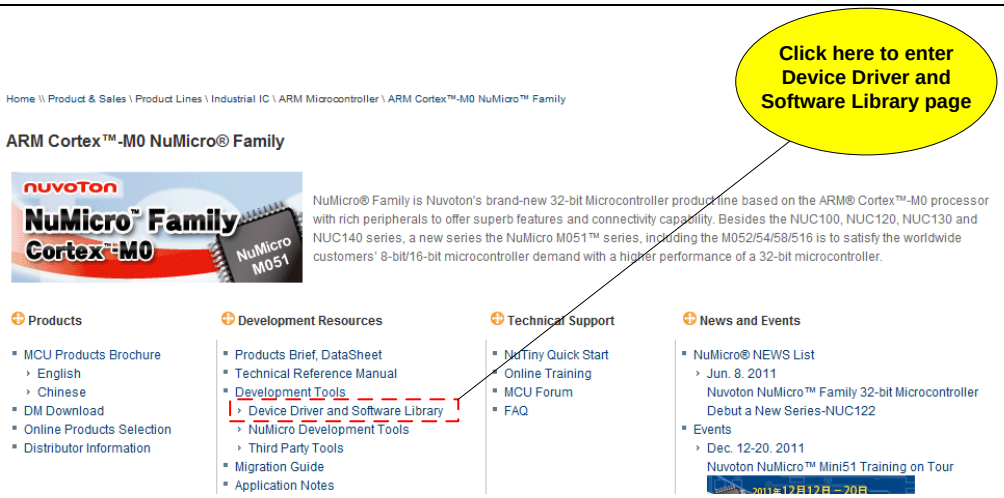
Step 3	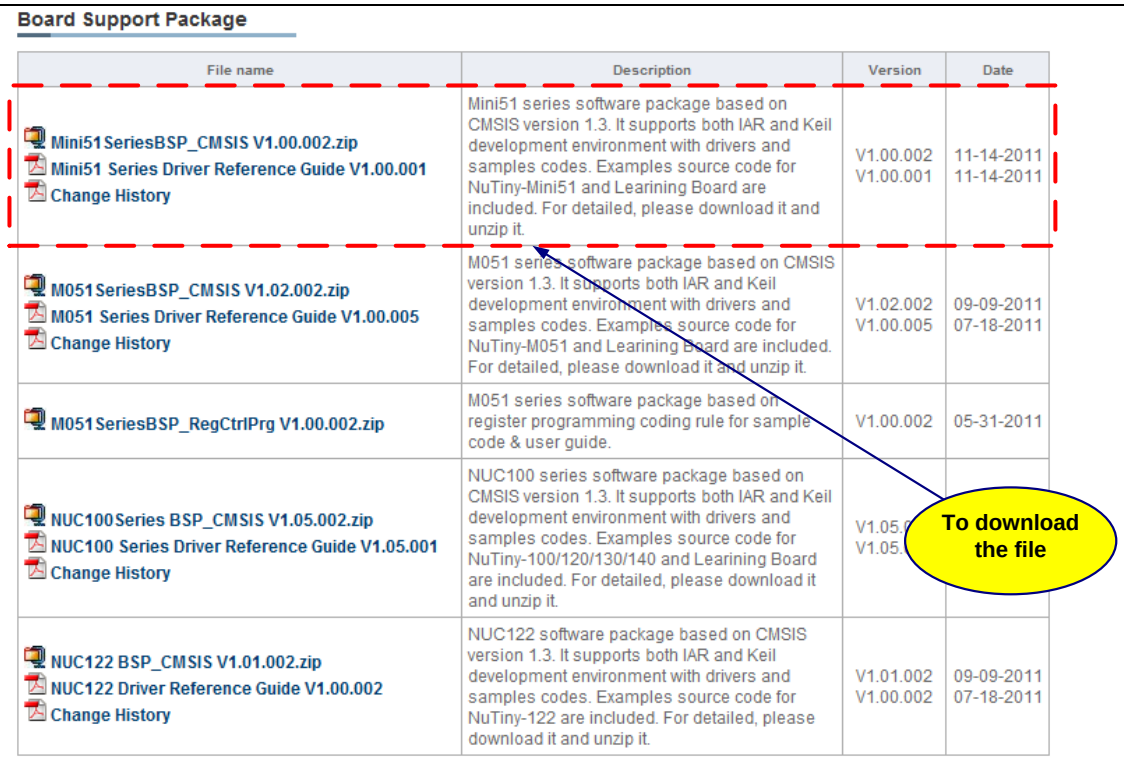 File name / Description / Version / Date Mini51SeriesBSP_CMSIS V1.00.002.zip Mini51 Series Driver Reference Guide V1.00.001 Change History Mini51 series software package based on CMSIS version 1.3. It supports both IAR and Keil development environment with drivers and samples codes. Examples source code for NuTiny-Mini51 and Learining Board are included. For detailed, please download it and unzip it. V1.00.002 V1.00.001 11-14-2011 11-14-2011 M051SeriesBSP_CMSIS V1.02.002.zip M051 Series Driver Reference Guide V1.00.005 Change History M051 series software package based on CMSIS version 1.3. It supports both IAR and Keil development environment with drivers and samples codes. Examples source code for NuTiny-M051 and Learining Board are included. For detailed, please download it and unzip it. V1.02.002 V1.00.005 09-09-2011 07-18-2011 M051SeriesBSP_RegCtrlPrg V1.00.002.zip M051 series software package based on register programming coding rule for sample code & user guide. V1.00.002 05-31-2011 NUC100Series BSP_CMSIS V1.05.002.zip NUC100 Series Driver Reference Guide V1.05.001 Change History NUC100 series software package based on CMSIS version 1.3. It supports both IAR and Keil development environment with drivers and samples codes. Examples source code for NuTiny-100/120/130/140 and Learining Board are included. For detailed, please download it and unzip it. NUC122 BSP_CMSIS V1.01.002.zip NUC122 Driver Reference Guide V1.00.002 Change History NUC122 software package based on CMSIS version 1.3. It supports both IAR and Keil development environment with drivers and samples codes. Examples source code for NuTiny-122 are included. For detailed, please download it and unzip it. V1.01.002 V1.00.002 09-09-2011 07-18-2011
Step 4	To download the **NuMicro™ Mini51 SeriesBSP_CMSIS** software library

7 Revision History

Version	Date	Page	Description
1.0	Nov. 29, 2011	--	Initial Issued

Important Notice

Nuvoton products are not designed, intended, authorized or warranted for use as components in systems or equipment intended for surgical implantation, atomic energy control instruments, airplane or spaceship instruments, transportation instruments, traffic signal instruments, combustion control instruments, or for other applications intended to support or sustain life. Further more, Nuvoton products are not intended for applications wherein failure of Nuvoton products could result or lead to a situation wherein personal injury, death or severe property or environmental damage could occur.

Nuvoton customers using or selling these products for use in such applications do so at their own risk and agree to fully indemnify Nuvoton for any damages resulting from such improper use or sales.

Please note that all data and specifications are subject to change without notice. All the trademarks of products and companies mentioned in this datasheet belong to their respective owners.